(2:1)

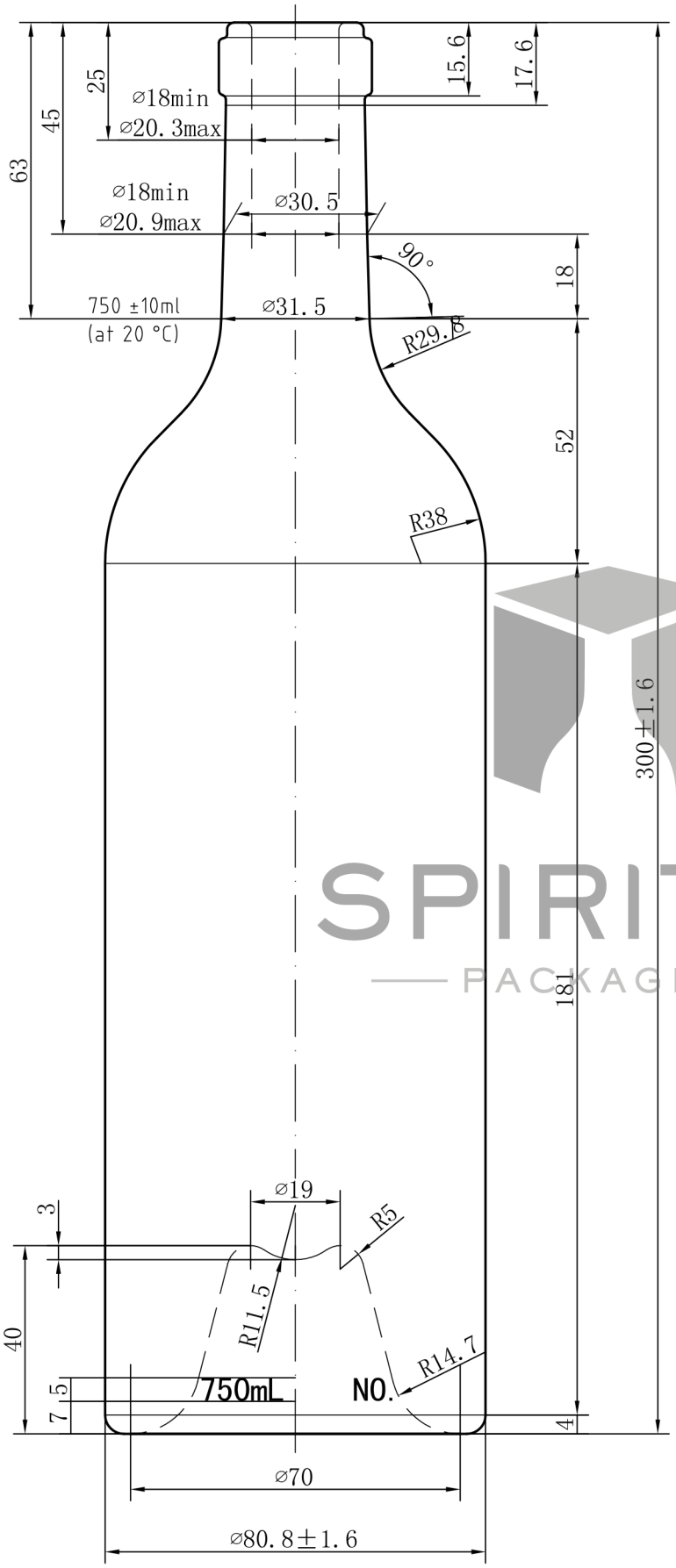

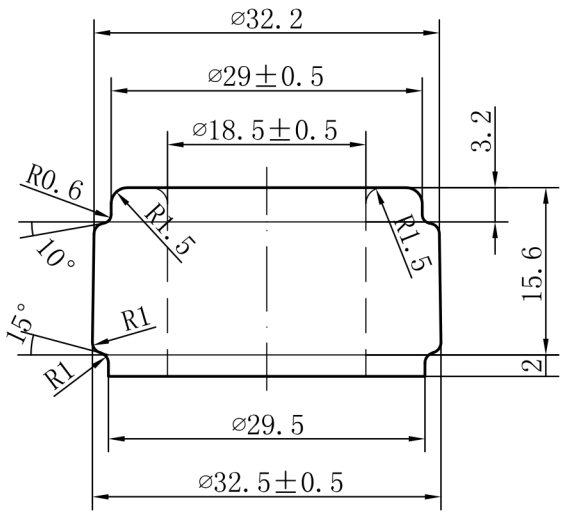

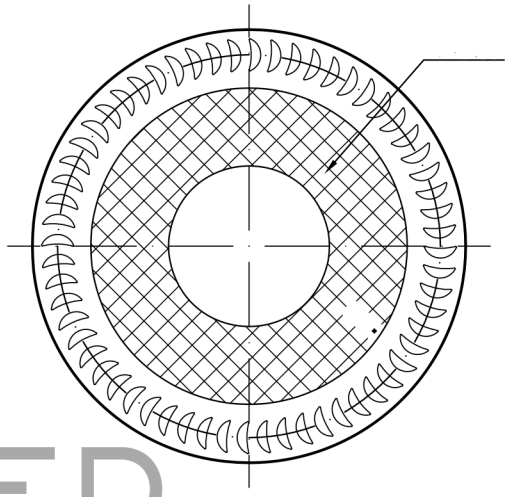

SPIRITED
PACKAGING

Item		Specification
Capacity		750 mL
Brim Cap.		772±10 mL
Weight		800±25 g
Height		300±1.6mm
Diameter		80.8±1.6mm
Finish		
Neck	Outside Diameter	32.5±0.5mm
	Inner Diameter	18.5±0.5mm
Design		M1:1
	2013.11	
Item No.	SPI-1706	