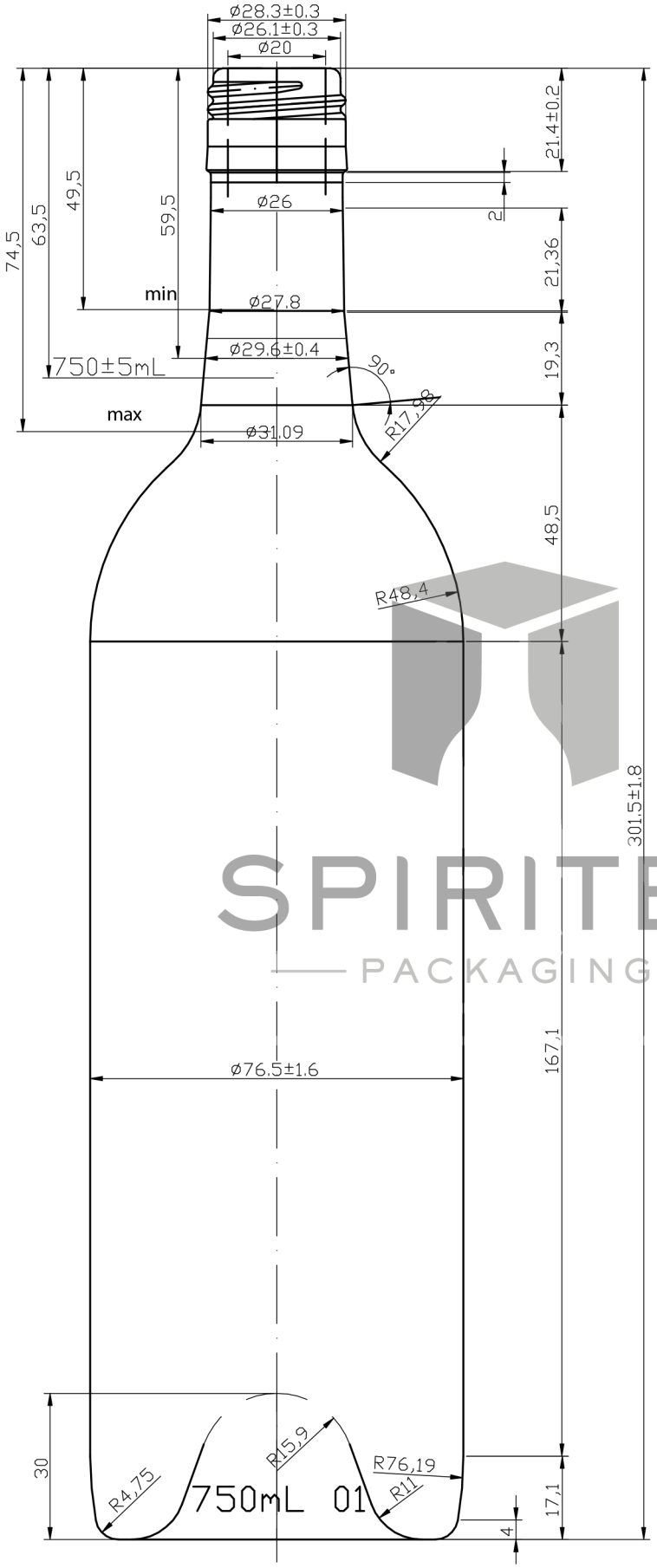

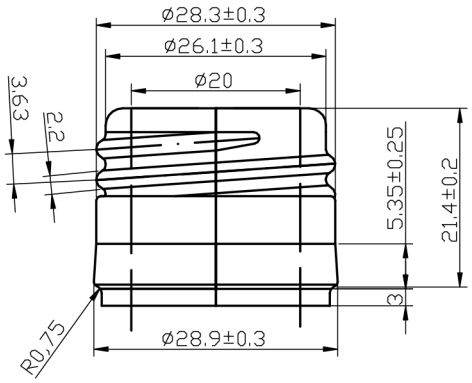

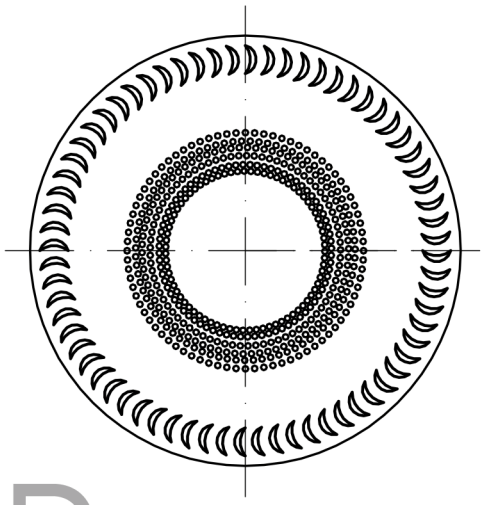

SPIRITED
PACKAGING

Capacity		750 mL
Brim Capacity		772±10mL
Weight		545±25g
Height		301.5±1.8mm
Diameter		76.5±1.6mm
Neck Finish		
	Finish Height	21.4±0.2mm
	Outside Diameter	28.9±0.3mm
	Inner Diameter	20 mm
Item No.		SPI-1056